CE-8630 EX1

FUJITSU TEN SERVICE MANUAL

AM-FM MPX. RADIO WITH ELECTRONIC TUNER and CASSETTE TAPE PLAYER (Dolby* NR)

D12 (CE-8630EX1)

TABLE OF CONTENTS

	PAGE
COMPOSITIONS, CONNECTIONS, PACKING VIEW	2
SPECIFICATIONS	3
HOOK-UP, EXPLANATION OF FR/CL SWITCH	4
SCHEMATIC	5, 6
WIRING ON PC BOARD	7, 8
SCHEMATIC, KEY-MATRIX SW.	9
EXPLODED VIEW	10
EXPLODED VIEW (CASSETTE DECK)	11
EXPLANATION ON IC TERMINALS	12, 13
SEGMENT, PLAYBACK HEAD ADJUSTMENT	14
ALIGNMENT	15~17
REPLACEMENT PARTS LIST	18~22

* Dolby noise reduction manufactured under license from Dolby Laboratories Licensing Corporation.
"DOLBY" and the double-D symbol are trademarks of Dolby Laboratories Licensing Corporation.

FUJITSU TEN

COMPOSITIONS

Packing No.	ITEM	Stock No.	Q'ty
①	Main unit	CE-8630	1
②	Package	RN-MZF-5475	1
③	Poly form	RN-MZB-1482A	1
④	Poly form	RN-MZB-1483A	1
⑤	Lead assembly	RN-EWJ-5030	1
⑤	Lead assembly	RN-EWJ-5384	1
⑤	Spacer	RN-MSE-1812	1
⑤	Screw	F6-SSA-5×8S	4
⑤	Bolt	RN-MBW-D4×10S	1
⑤	Nut	RN-MNR-D6S	2
⑤	Screw	RN-MTN-A6×16	2
⑤	Special screw	RN-MET-1495	1
⑤	Special screw	RN-MET-144	2
⑤	Washer	F6-WN-4S	1
⑥	Escutcheon	RN-MDP-1920A	1
⑦	Bracket	RN-MBE-1904	1
⑧	Bracket	RN-MBE-1903	2
⑧	Spring	RN-MSC-1473	2
⑨	Bracket	RN-MBF-1040	1
⑩	Owner's manual	RN-MXK-1070	1
⑪	Label	RN-MLP-1829	1

PACKING VIEW

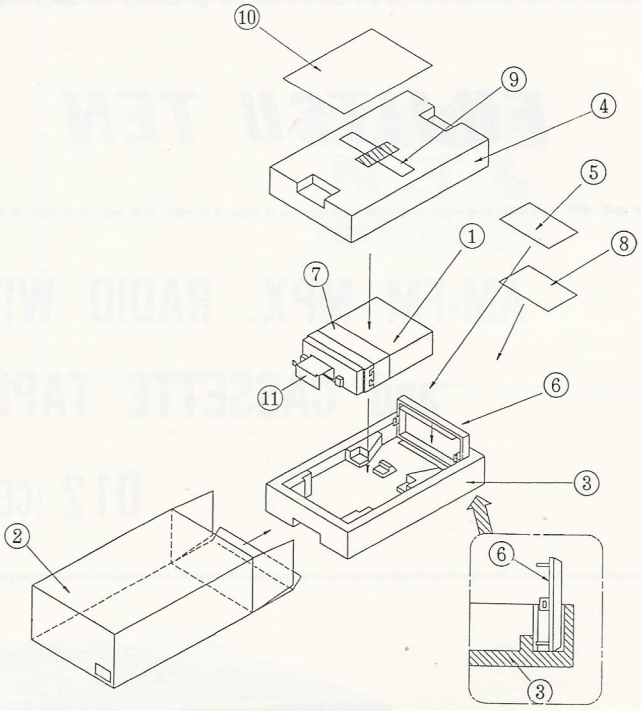

Fig. 1

CONNECTIONS

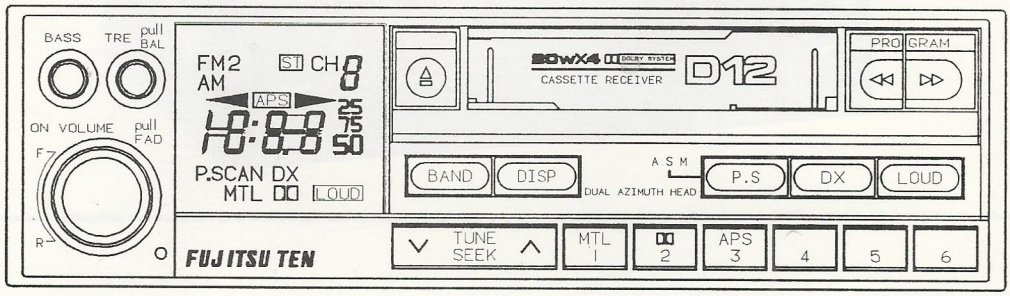

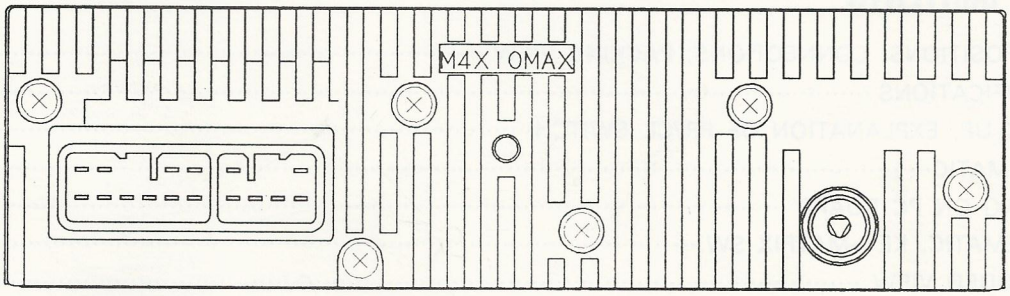

10P CONNECTOR (PIN VIEW)

1	F-R(+)
2	F-L(+)
3	ACC
4	BACK UP +B
5	F-R(-)
6	F-L(-)
7	GND
8	ANT +
9	AMP+B
10	DIM

6P CONNECTOR (PIN VIEW)

1	R-R(+)
2	R-L(+)
3	R-R(-)
4	———
5	———
6	R-L(-)

Fig. 2

SPECIFICATIONS

SM-676
[CE-8630EX1] D12

MAIN UNIT

(RADIO SECTION)	AM	FM
TUNING RANGE	522 to 1611 kHz	87.5 to 108.0 MHz
INTERMEDIATE FREQUENCY	450 kHz	10.7 MHz
SENSITIVITY (MAX.)	32 dBμ or better	18 dBμ or better (Stereo)
SENSITIVITY AT ELECTRONIC TUNING	Distant: 32±6 dBμ Local: Distant plus 20±6 dBμ	Distant: 20±6 dBμ Local: Distant plus 25±6 dBμ
LIMITING SENSITIVITY		3±5 dBμ
SIGNAL TO NOISE RATIO	21 dB or better (35 dBμ input)	50 dB or better (54 dBμ input) Stereo: 40 dB or better (54 dBμ input)
SEPARATION		25 dB or better
ELECTRICAL FIDELITY	100 Hz: 0±3 dB (74 dBμ input, Refer 400 Hz) 4 kHz: −14±5 dB (74 dBμ input, Refer 400 Hz)	100 Hz: 0±3 dB (54 dBμ input, Refer 400 Hz) 10 kHz: −11±5 dB (54 dBμ input, Refer 400 Hz)

(CASSETTE DECK SECTION)

NUMBER OF TRACKS	4-track 2-channel
TAPE SPEED	4.76cm/sec. (1-7/8", i.p.s.)
WOW & FLUTTER	0.45% or better (RMS)
CROSSTALK	40 dB or better
SEPARATION	25 dB or better
EQUALIZATION	Normal: t1=3,180 μsec., t2=120 μsec. Chrome and metal: t1=3,180 μsec., t2=70 μsec.
SIGNAL TO NOISE RATIO	46 dB or better (with MTT-150 test tape)
DOLBY NR CIRCUIT	
NOISE REDUCTION EFFECT	8 dB or better (400 Hz, MTT-150, CCIR filter)
DOLBY NR LEVEL	387.5 mV ±1 dB (with MTT-150 test tape)
TAKE-UP TORQUE	40 to 75 g-cm

(COMMON SECTION)

POWER INPUT	12-volt car battery, negative terminal to ground
Voltage	13.2 VDC
Current	Approx. 2.1 amperes (1W×4), MPX 7.3 amperes
SEMICONDUCTORS	12 ICs, 42 Transistors, 31 Diodes, 2 FET
DIMENSIONS	178(W)×50(H)×150(D)mm (7", 3-31/32", 5-29/32")
WEIGHT	Unit—1.6 kg (3.5 lbs.)

NOTES: Unless otherwise noted specification is measured with balance and fader control at center.

HOOK-UP

4–Speaker System

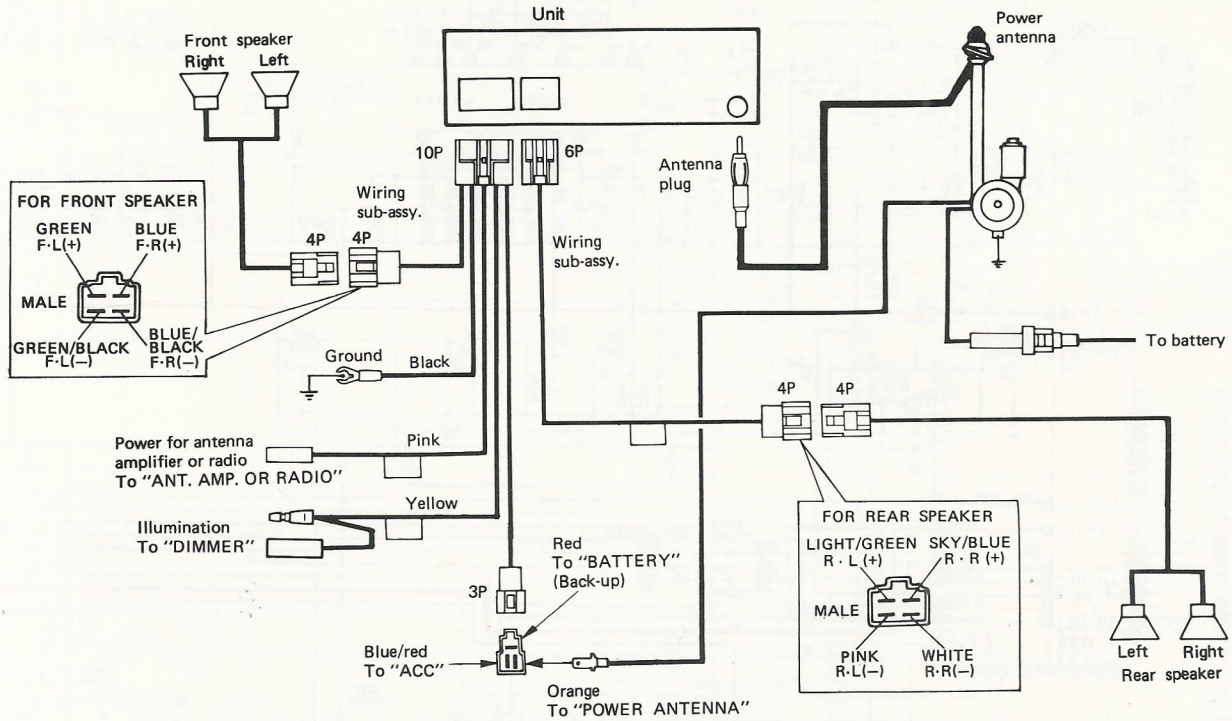

Fig. 3

EXPLANATION OF FR/CL SWITCH

The unit has a priority function for frequency display (FR) and clock display (CL).
Change the switch according to the table below.

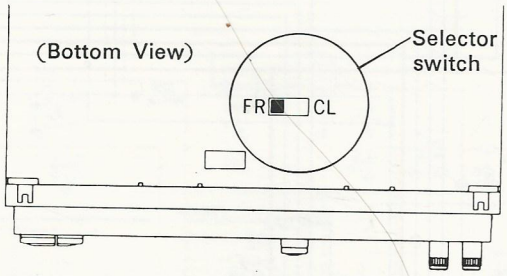

FR ■ CL Frequency Display Priority	During tape playback or radio reception, press the display button : the clock display mode is selected, and the current mode is returned to the initial display in approx. 5 seconds automatically.
FR ■ CL Clock display Priority	During radio reception, the clock is displayed. When the display button is depresed, the frequency display mode is selected, and this mode is returned to the initial clock display in approx. 5 seconds automatically.

Fig. 4

SCHEMATIC (ETV-1105)

SM-676
[CE-8630EX1] D12

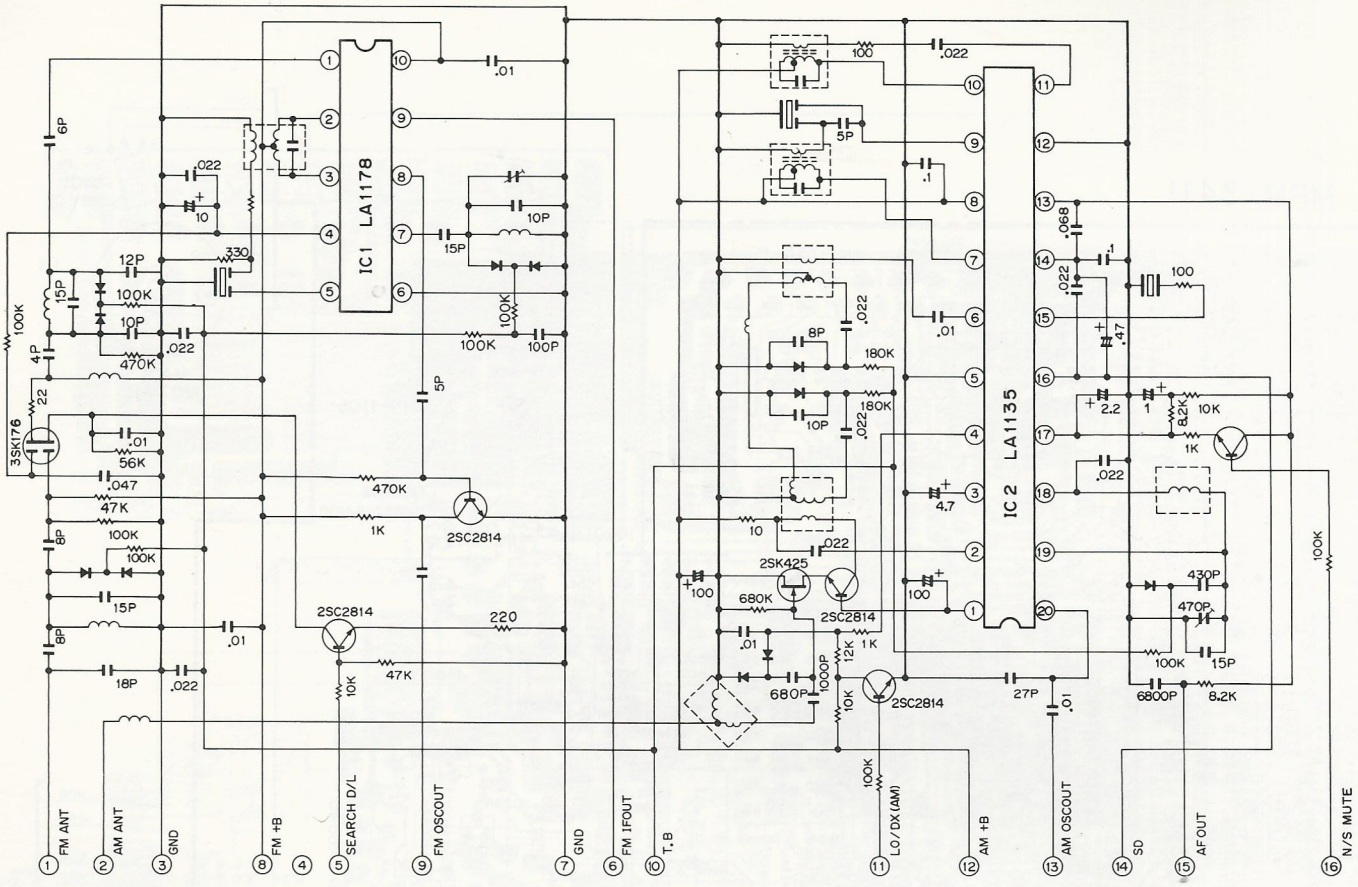

Fig. 7

KEY-MATRIX SW.

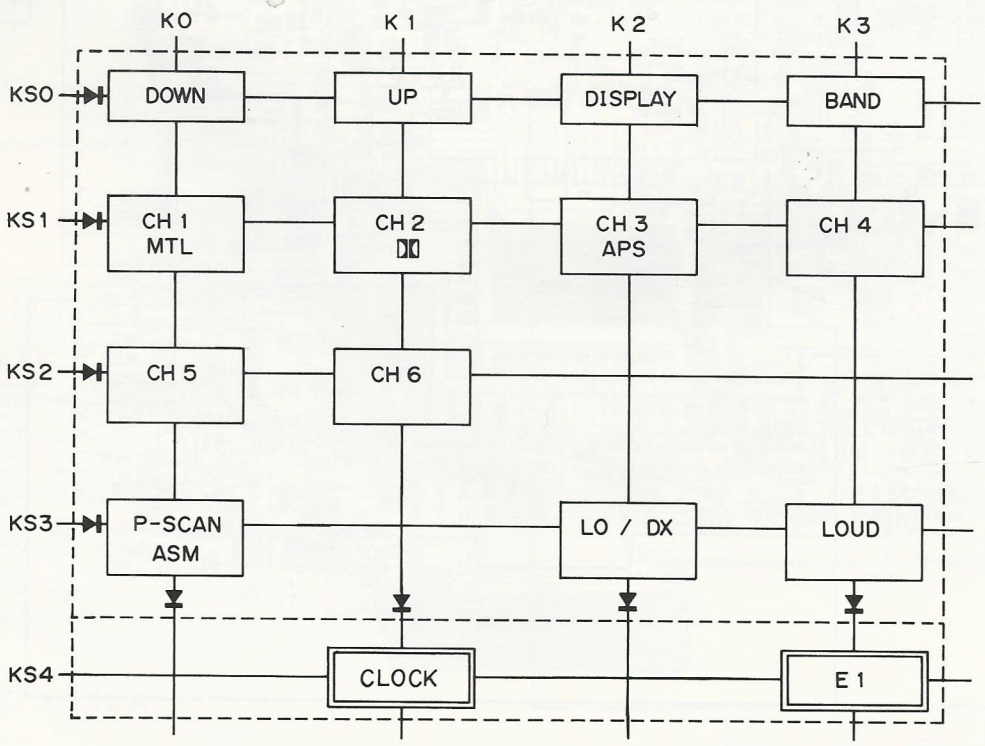

Fig. 8

EXPLODED VIEW

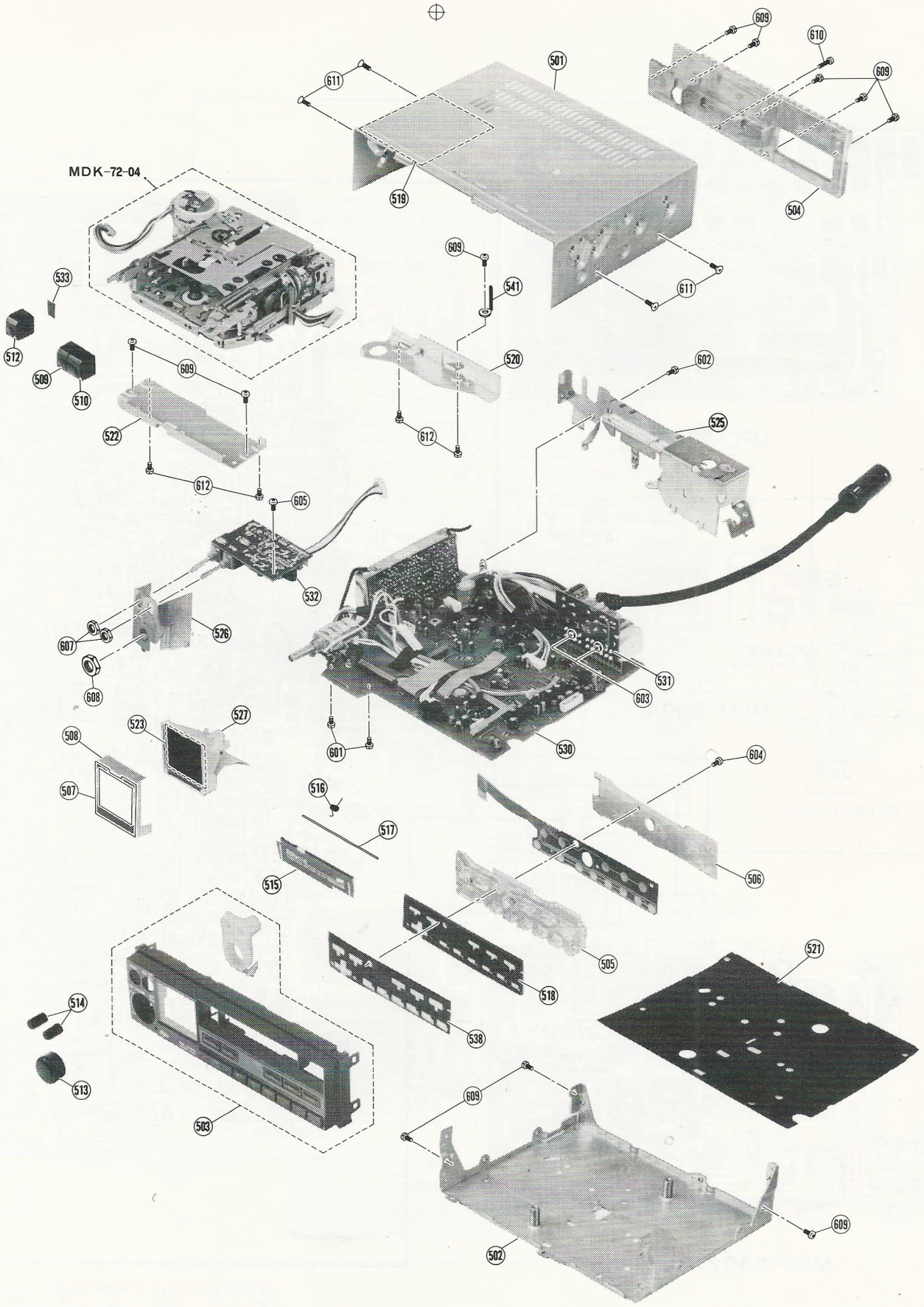

Fig. 9

NOTE : Printed circuit board does not include component parts to be mounted.

EXPLODED VIEW (DECK UNIT MDK-72-04)

SM-676
〔CE-8630EX1〕 D12

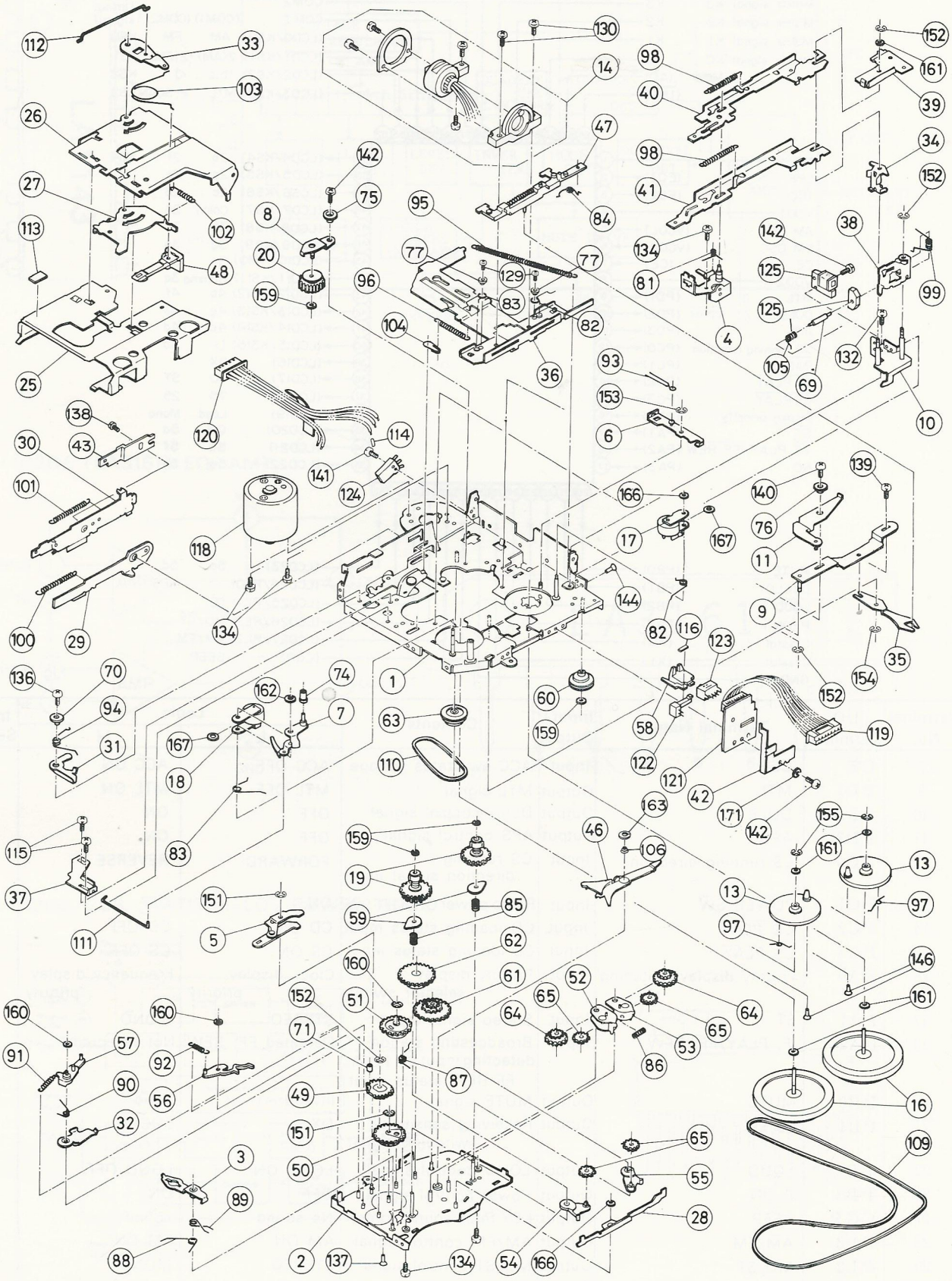

Fig. 10

EXPLANATION ON IC TERMINALS

○ IC211 μPD1719G-555

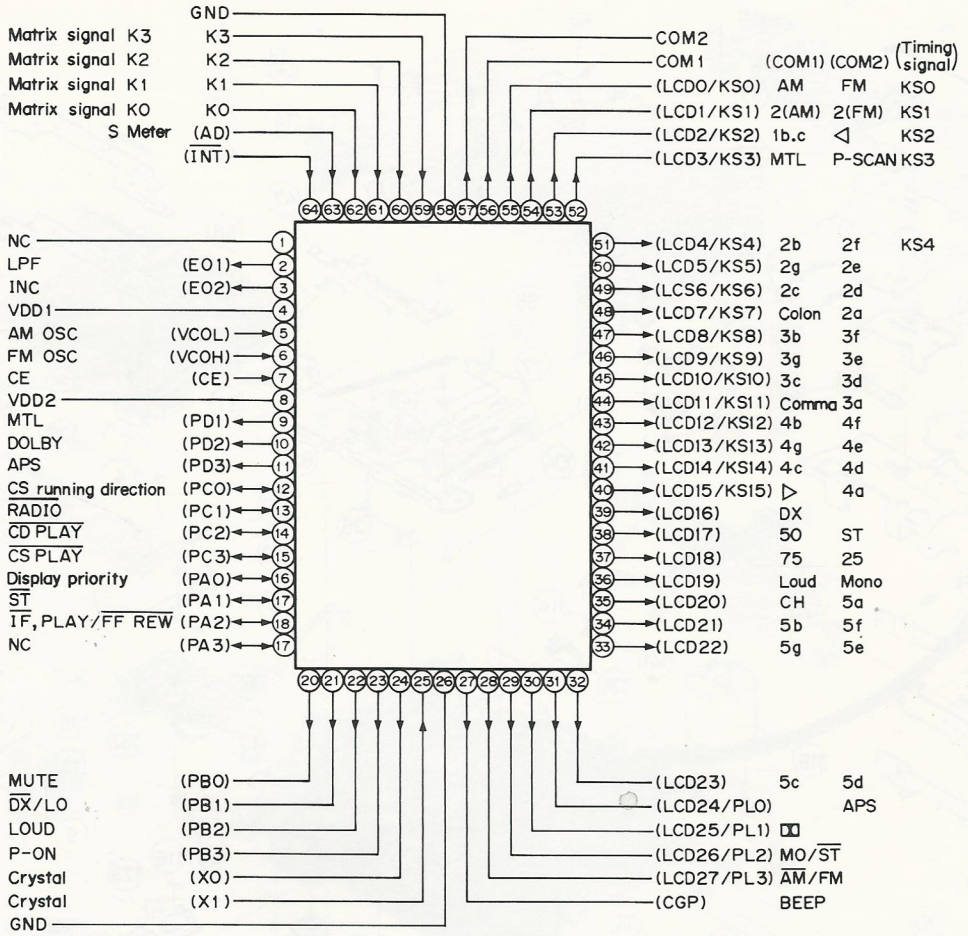

Fig. 12

Terminal No.	I/O Terminal	Terminal Name	Input/ Output	Contents	Logic L	Logic H	Initial Setting
7	CE	CE	Input	ACC sw status voltage	ACC OFF	ACC ON	L
9	PD1	MTL	Output	MTL signal	MTL OFF	MTL ON	L
10	PD2	DOLBY	Output	Dolby control signal	OFF	ON	L
11	PD3	APS	Output	APS control signal	OFF	ON	—
12	PC0	CS running direction	Input	CS running direction signal input	FORWARD	REVERSE	—
13	PC1	$\overline{\text{POWER SW}}$	Input	Radio power ON/OFF SW	ON	OFF	—
14	PC2	$\overline{\text{CD PLAY}}$	Input	CD loading status input	CD ON	CD OFF	—
15	PC3	$\overline{\text{CS PLAY}}$	Input	CS loading status input	CS ON	CS OFF	—
16	PA0	Priority display switching	Input	Priority display selector switch	Clock display priority	Frequency display priority	—
17	PA1	$\overline{\text{ST}}$	Input	Stereo signal input	STEREO	MONO	—
18	PA2	$\overline{\text{IF}}$, PLAY/$\overline{\text{FF, REW}}$	Input	Broadcasting station detecting input CS PLAY FF REW status input	Detected FF, REW	Not detected PLAY	
20	PB0	MUTE	Output	MUTE signal	Invalid	Valid	L
21	PB1	LO/$\overline{\text{DX}}$	Output	Receiving sensitivity switching signal	DX	LOCAL	H
22	PB2	$\overline{\text{LOUD}}$	Output	LOUD control signal	LOUD ON	LOUD OFF	H
23	PB3	P-ON	Output	Power control signal	OFF	ON	
27	CGP	BEEP	Output	KEY fetch sound control	No sound	sound	L
28	PL3	$\overline{\text{AM}}$/FM	Output	AM/FM control signal	AM ON	FM ON	H
29	PL2	MO/$\overline{\text{ST}}$	Output	MO/ST control signal	STEREO	MONO	L
51~55	KS0~4	KS0~4	Output	Timing signal output	Invalid	Valid	L
59~62	K0~3	K0~3	Input	Matrix input	SW OFF	SW ON	
63	AD	Signal meter	Input	Field strength input			

◦ IC202 (LA1143) FM IF

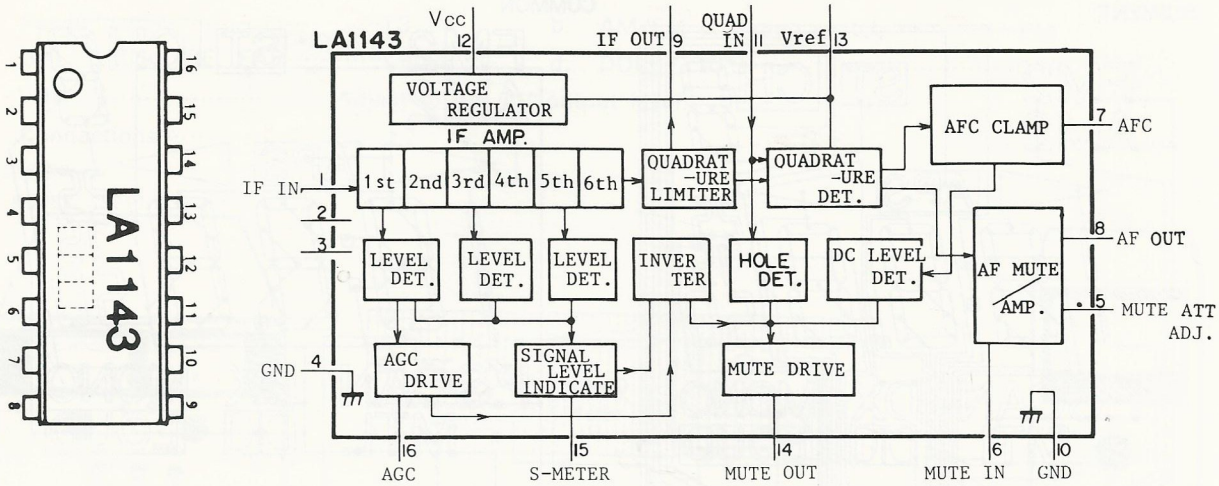

Fig. 12

◦ IC204 (LA3161) EQ. AMP.

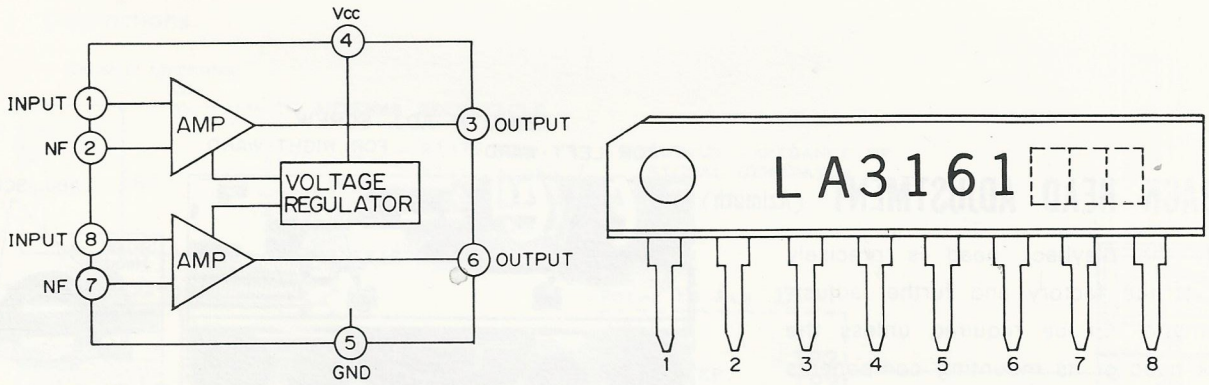

Fig. 13

◦ IC207, 208 (AN7173K-LD) POWER AMP.

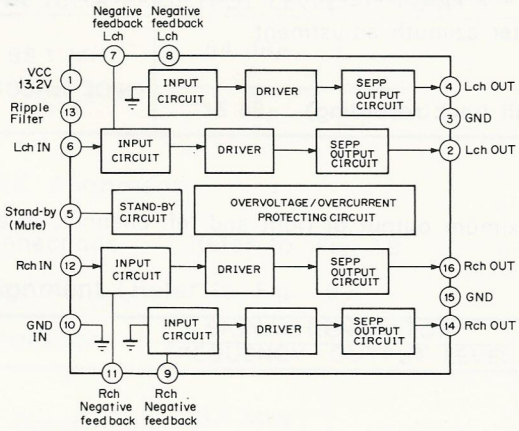

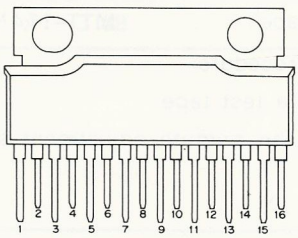

Fig. 14

SEGMENT

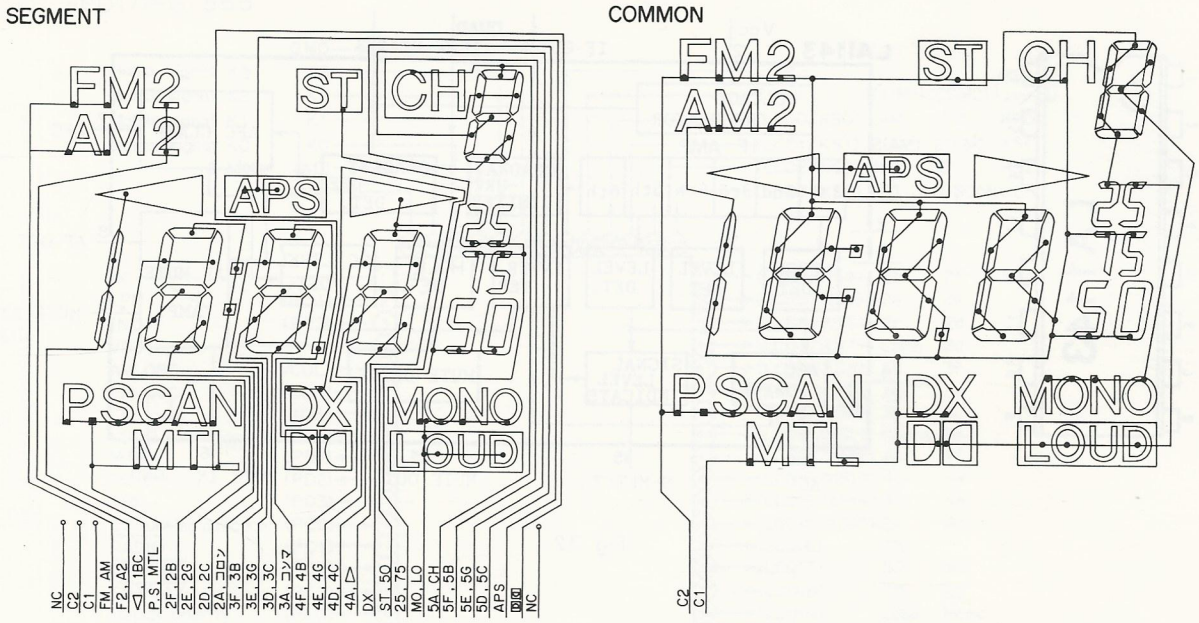

Fig. 15

PLAYBACK HEAD ADJUSTMENT (Azimuth)

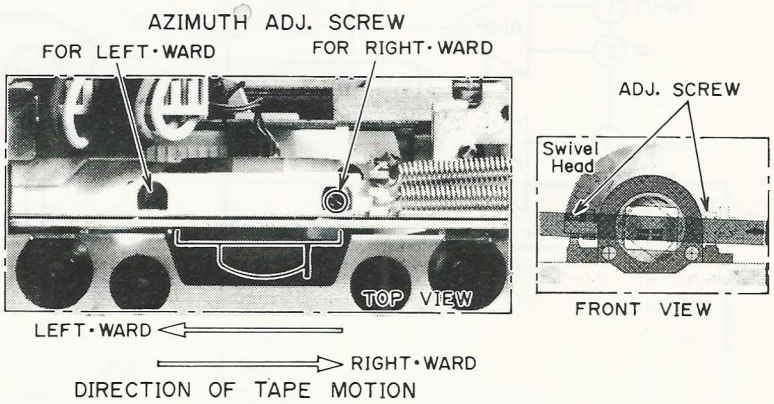

Fig. 16

Normally the playback head is precisely aligned at the factory and further adjustment should not be required unless the playback head or its mounting components are replaced. Beware of excessive adjustment. because improper adjustment results in inferior performance. If the azimuth is unnecessarily varied, the angle gets out of order, which cause lowering of tonal quality Carefully adjust the azimuth adjust screw as shown in Fig. 16. Always use the test tape for azimuth adjustment because improper adjuustment would cause bad effect on the Dolby level adjustment. Dolby level should be readjusted after azimuth adjustment.

a. Power supply : 13.2 VDC

b. Test tape : MTT-114N (10 kHz, −10 dB Full track recording)

Alignment Procedure

1. Insert a test tape.
2. Drive the azimuth adjustment screws so as to get maximum output of right and left channels in either track.

FM ALIGNMENT

Standard adjustment condition

a. Power supply ·····13.2V
b. AM/FM changing switch ·····FM
c. BAL, BASS, TRE, FAD·····Center
d. DOLBY, APS·····OFF
e. VOL ·····Adjust to get 2V output level.
f. Connections ·····Fig. 17

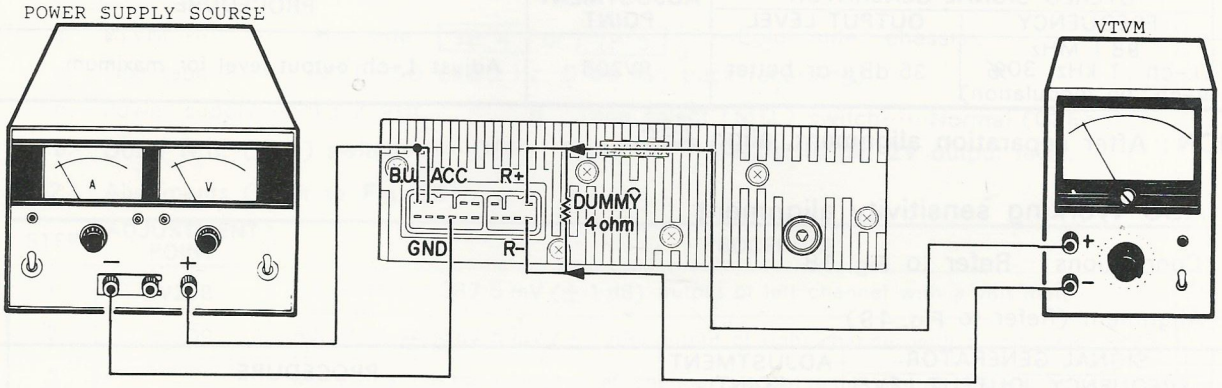

Fig. 17

〔1〕 Limiting sensitivity alignment

(1) Connections

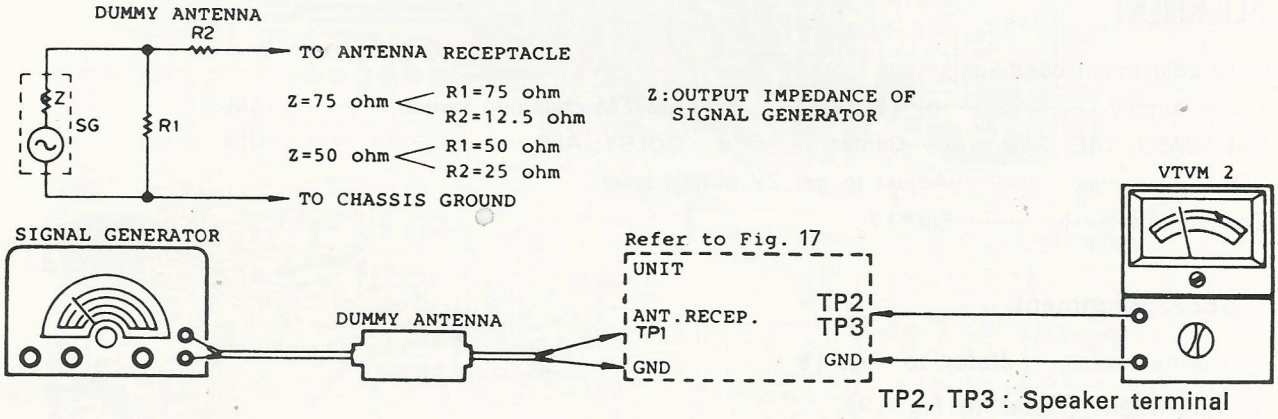

Fig. 18

(2) Alignment (Refer to Fig. 19)

STEP	SIGNAL GENERATOR FREQUENCY	SIGNAL GENERATOR OUTPUT LEVEL	ADJUSTMENT POINT	PROCEDURE
1	98.1 MHz (400Hz, 30%)	54 dBμ	———	Adjust volume control (VOL) until power amplifier output voltage is 2V.
2		15 dBμ	RV202	Adjust output voltage for −3 dB

〔2〕 SEEK Alignment

(1) Connections Refer to Fig. 18

(2) Alignment (Refer to Fig. 19)

STEP	PURPOSE	SIGNAL GENERATOR FREQUENCY	SIGNAL GENERATOR OUTPUT LEVEL	ADJUSTMENT POINT	PROCEDURE
1	Distant sensitivity	98.1 MHz (400 Hz, 30%)	16±4 dBμ	RV201	Depress SEEK button to actuate the searching, and then adjust sensitivity so that the searching action may stop nearly at 98.1 MHz.

〔3〕 Separation alignment

(1) Connections a. Signal generator ·····Connect the TP1

b. VTVM ·····Connect the TP2 (L-ch)

(2) Alignment (Refer to Fig. 19)

STEP	STEREO SIGNAL GENERATOR FREQUENCY	STEREO SIGNAL GENERATOR OUTPUT LEVEL	ADJUSTMENT POINT	PROCEDURE
1	98.1 MHz (L-ch: 1 kHz, 30% R-ch: no modulation)	35 dBμ or better	RV206	Adjust L-ch output level for maximum.

CAUTION: After separation alignment, align ASC.

〔4〕 ASC Working sensitivity alignment

(1) Connections Refer to Fig. 18

(2) Alignment (Refer to Fig. 19)

STEP	SIGNAL GENERATOR FREQUENCY	SIGNAL GENERATOR OUTPUT LEVEL	ADJUSTMENT POINT	PROCEDURE
1	98.1 MHz (1 kHz, 30%)	35 dBμ	RV203	Adjust the separation for 13 dB.

AM ALIGNMENT

Standard adjustment condition

a. Power supply ·····13.2V

b. AM/FM changing switch ·····AM

c. BAL, BASS, TRE, FAD·····Center

d. DOLBY, APS·····OFF

e. VOL ·····Adjust to get 2V output level.

f. Connections ·····Fig. 17

〔1〕 SEEK Alignment

(1) Connections Refer to Fig. 18

(2) Alignment (Refer to Fig. 19)

STEP	PURPOSE	SIGNAL GENERATOR FREQUENCY	SIGNAL GENERATOR OUTPUT LEVEL	ADJUSTMENT POINT	PROCEDURE
1	Distant sensitivity	999 kHz (400 Hz, 30%)	26 dBμ	RV204	Depress SEEK button to actuate the searching, and then adjust sensitivity so that the searching action may stop nearly at 999 kHz.

DOLBY NR LEVEL ALIGNMENT

NOTES: 1. Always use the test tape (MTT-150) for alignment.
2. In alignment of Dolby N.R. circuit, only gain adjustment is required.
3. Make sure that Dolby level falls with in the Dolby standards, when parts in the head or Dolby N.R. circuit being exchanged.
4. Always use the parts listed in the parts list for Dolby circuit.

(1) Connections

a. VTVM·····Hot side: TP 4 or TP 5 Cold side: chassis

b. Test tape ·····MTT-150 (400 Hz, 0 dB full track recording)

c. Power supply ·····13.2 VDC d. Tape select (MTL) switch·····Normal (OFF).

e. Dolby N.R. (DD) switch·····OFF f. VOL·····Adjust to get 2V output level.

(2) Alignments (Refer to Fig. 19)

STEP	ADJUSTMENT POINT	PROCEDURE
1	RV208	Adjust to get 387.5 mV (± 1 dB) output of left channel with a volt meter.
2	RV209	Adjust to get 387.5 mV (± 1 dB) output of right channel with a volt meter.
3	———	Make sure that the output of left channel is equal to that of right channel, by using a volt meter.

NOTE: Adjust to get equal output of right and left channels in either track.

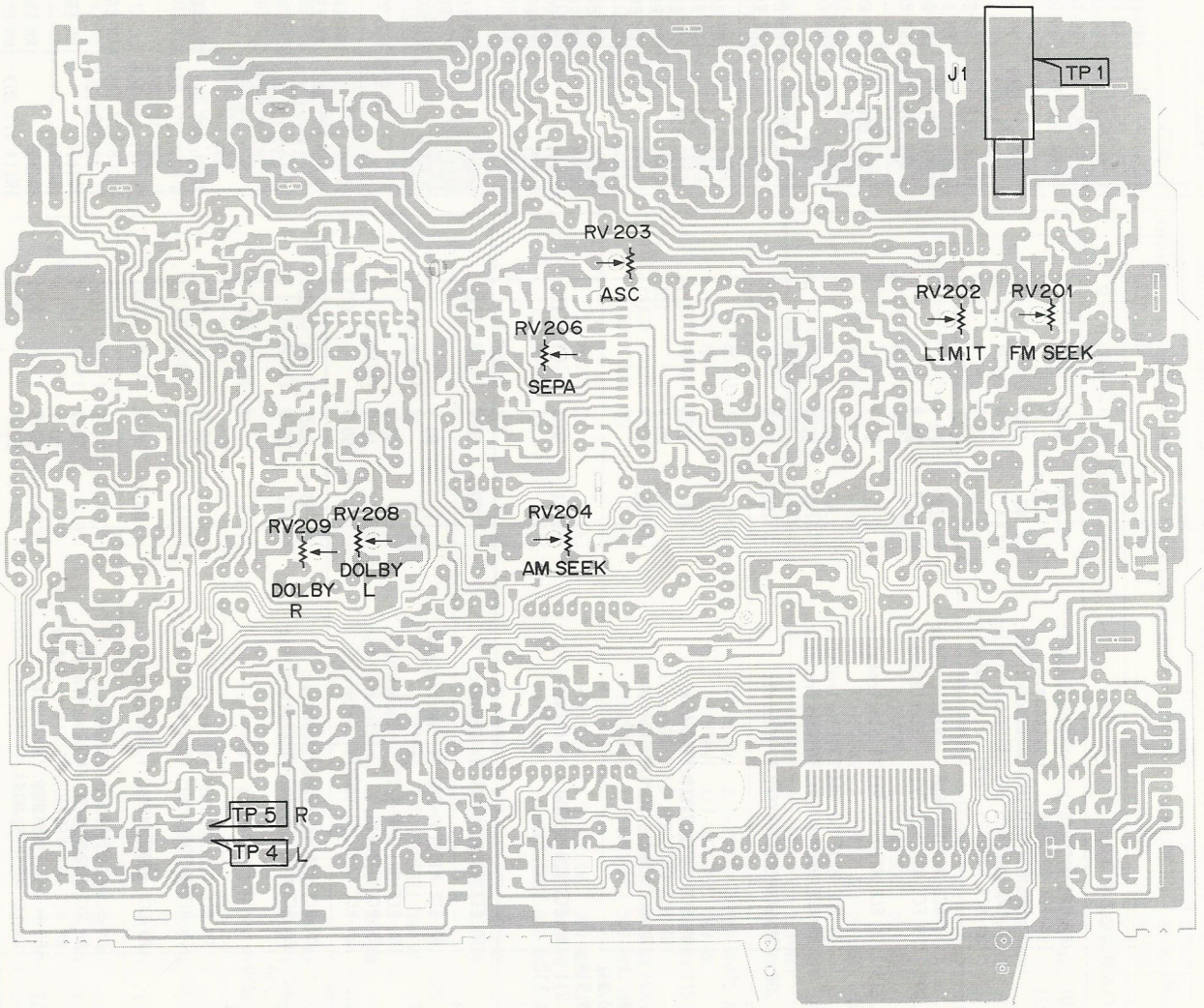

Fig. 19

REPLACEMENT PARTS LIST

Note: Main replacement parts are marked O in the remarks column.

Symbol. No.	Stock No.	Parts name	Description Chip:(C)			Remark
CAPACITORS			Unit: μF, P=pF, F=F			
C1, 308, 310	RN-ECE-M152V16-1	Electrolytic	1500	16 V		
C2	RN-ECK-DB221KY	Ceramic	220 p			
C101	RN-ECE-M470V10-615/TT	Electrolytic	47	10 V		
C102, 107	RN-ECE-M4R7V25-302/TT	Electrolytic	4.7	25 V		
C103	RN-ECE-M4R7V25-32/TT	Electrolytic	4.7	25 V		
C104, 105	RN-ECE-M220V10-608	Electrolytic	22	10 V		
C106, 274, 293 295	RN-ECE-M4R7V25-7/TT	Electrolytic	4.7	25 V		
C108, 111, 225 228, 232	RN-ECE-MR10V50-303/TT	Electrolytic	.1	50 V		
C109	RN-ECE-MR47V50-504/TT	Electrolytic	.47	50 V		
C110	RN-ECE-MR47V50-302/TT	Electrolytic	.47	50 V		
C112, 207, 208 212, 216 236~238, 256 257	RN-ECK-C2B223KYEPB/Y	Ceramic	.022	25 V	(C)	
C113, 114, 271	RN-ECK-C2F104ZYEPB/Y	Ceramic	.1	25 V	(C)	
C115	RN-ECK-CB1E223K-1/TY	Ceramic	.022	25 V	(C)	
C116, 117, 204 206, 209~211 213, 230, 231 340, 343, 348	RN-ECK-C2F473ZYHPB/Y	Ceramic	.047	50 V	(C)	
C201, 205, 234 283, 284, 332 342, 350	RN-ECK-C2B103MYHPB/Y	Ceramic	.01	50 V	(C)	
C202, 203 296~299	RN-ECK-C2B102MYHPC/Y	Ceramic	1000p	50 V	(C)	
C214, 219, 252 253, 337	RN-ECE-M1R0V50-303/TT	Electrolytic	1	50 V		
C215	RN-ECE-MR10V50-5/TT	Electrolytic	.1	50 V		
C217	RN-ECE-M100V16-11	Electrolytic	10	16 V		
C218	RN-ECC-C2SL330JYHPB/Y	Ceramic	33 p	50 V	(C)	
C220	RN-ECC-C2SL151JYHPB/Y	Ceramic	150 p	50 V	(C)	
C221, 235, 262 273, 275, 276 281, 282, 290 292, 294	RN-ECE-M4R7V25-303/TT	Electrolytic	4.7	25 V		
C222	RN-ECC-C2SL471JYHPC/Y	Ceramic	470 p	50 V	(C)	
C223, 247, 260 261, 291	RN-ECE-M470V10-405/TT	Electrolytic	47	10 V		
C224	RN-ECK-C2B682MYHPB/Y	Ceramic	6800p	50 V	(C)	
C226	RN-ECC-C2RH391JYHPB/Y	Ceramic	390 p	50 V	(C)	
C227	RN-ECE-MR22V50-303/TT	Electrolytic	.22	50 V		
C229	RN-ECE-M3R3V50-303/TT	Electrolytic	3.3	50 V		
C233	RN-ECK-C2B332MYHPB/Y	Ceramic	3300p	50 V	(C)	
C239	RN-ECC-C2SL331JYHPC/Y	Ceramic	330 p	50 V	(C)	
C240, 263	RN-ECK-C2B472MYHPC/Y	Ceramic	4700p	50 V	(C)	

Symbol. No.	Stock No.	Parts name	Description Chip:(C)			Remark
C241	RN-ECE-M220V16-303/TT	Electrolytic	22	16 V		
C250, 251	RN-ECC-C2SL821JYHPC/Y	Ceramic	820 p	50 V	(C)	
C254, 255, 278	RN-ECE-M101V6R-405/TT	Electrolytic	100	6.0V		
C258, 259	RN-ECK-C2B183KYEPB/Y	Ceramic	.018	25 V	(C)	
C264, 268, 336	RN-ECE-M2R2V50-303/TT	Electrolytic	2.2	50 V		
C265, 277, 289 341, 344	RN-ECE-M100V16-303/TT	Electrolytic	10	16 V		
C266, 288	RN-ECE-MR47V50-303/TT	Electrolytic	.47	50 V		
C267	RN-ECH-R224V50-4/TP	M.P.	.22	50 V		
C269, 270	RN-ECE-M470V16-405/TT	Electrolytic	47	16 V		
C272, 309, 311	RN-ECE-M221V16-613/TT	Electrolytic	220	16 V		
C279, 280	RN-ECY-MR68V50-K1	Tantalum	.68	50 V		
C285, 286	RN-ECK-C2B222MYHPB/Y	Ceramic	2200p	50 V	(C)	
C300, 301, 303 304	RN-ECF-R223V50-JZ	Mylar	.022	50 V		
C302, 305	RN-ECE-M101V10-302	Electrolytic	100	10 V		
C306, 307	RN-ECE-M101V10-52/TT	Electrolytic	100	10 V		
C312~319	RN-ECH-R104V50-4/TP	M.P.	.1	50 V		
C320~329	RN-ECC-C2SL221JYHPB/Y	Ceramic	220 p	50 V	(C)	
C330, 333	RN-ECY-MR10V16-M1/TP	Tantalum	.1	16 V		
C331	RN-ECE-M2R2V50-9/TT	Electrolytic	2.2	50 V		
C334	RN-ECY-M4R7V16-M1/TP	Tantalum	4.7	16 V		
C335	RN-ECE-M221V10-612/TT	Electrolytic	220	10 V		
C338	RN-ECC-C2CH100DYHPB/Y	Ceramic	10 p	50 V	(C)	
C339	RN-ECC-C2CH220JYHPB/Y	Ceramic	22 p	50 V	(C)	
C345	RN-ECK-DB102KY	Ceramic	1000p			
C346	RN-ECE-M221V25-3	Electrolytic	220	25 V		
C347	RN-ECX-C183V05-12	Super-capacitor	.018F	05 V		
CI1	RN-ECI-A271-1	Filter	270p			
CV201	RN-ECV-A20-128	Trimmer	20P			
RESISTORS			Unit: ohm, K=kohm			
R101	RN-ERG-I2B221JR-1/Y	Metallic	220	5%	1/10W (C)	
R102~105, 212 213, 222, 233 239, 240, 286 289, 292, 299 301, 322, 323 373	RN-ERG-I2B473JR-1/Y	Metallic	47 K	5%	1/10W (C)	
R106, 107, 221 270, 271, 283 285, 319, 344 347, 348, 364	RN-ERG-I2B103JR-1/Y	Metallic	10 K	5%	1/10W (C)	
R108~110, 113 225, 266, 267	RN-ERG-I2B332JR-1/Y	Metallic	3.3K	5%	1/10W (C)	
R111	RN-ERG-I2B681JR-1/Y	Metallic	680	5%	1/10W (C)	
R112	RN-ERG-IC681J-1/TY	Metallic	680	5%	1/8W (C)	
R114, 115, 203 206, 223	RN-ERG-I2B331JR-1/Y	Metallic	330	5%	1/10W (C)	
R116~119	RN-ERG-I2B822JR-1/Y	Metallic	8.2K	5%	1/10W (C)	

Symbol. No.	Stock No.	Parts name	Description Chip:(C)	Remark
R201,202,277 372	RN-ERG-I2B472JR-1/Y	Metallic	4.7K 5% 1/10W (C)	
R207,252,253	RN-ERG-I2B680JR-1/Y	Metallic	68 5% 1/10W (C)	
R208,229,273 332,371	RN-ERG-I2B101JR-1/Y	Metallic	100 5% 1/10W (C)	
R209,228,254 255	RN-ERG-I2B682JR-1/Y	Metallic	6.8K 5% 1/10W (C)	
R210,214,216 230,241,242	RN-ERG-I2B223JR-1/Y	Metallic	22 K 5% 1/10W (C)	
R211,227,231 275,360	RN-ERG-I2B224JR-1/Y	Metallic	220K 5% 1/10W (C)	
R215,297,298	RN-ERG-I2B122JR-1/Y	Metallic	1.2K 5% 1/10W (C)	
R217,235,260 265,287,288 333,334,365	RN-ERG-I2B222JR-1/Y	Metallic	2.2K 5% 1/10W (C)	
R218,276,284 361	RN-ERG-I2B103JR-1/Y	Metallic	10 K 5% 1/10W (C)	
R220,300,345 346	RN-ERG-I2B102JR-1/Y	Metallic	1 K 5% 1/10W (C)	
R224	RN-ERG-I2B123JR-1/Y	Metallic	12 K 5% 1/10W (C)	
R225,266,267 274	RN-ERG-I2B332JR-1/Y	Metallic	3.3K 5% 1/10W (C)	
R226	RN-ERG-I2B152JR-1/Y	Metallic	1.5K 5% 1/10W (C)	
R232,236	RN-ERG-I2B684JR-1/Y	Metallic	680K 5% 1/10W (C)	
R234,281,282	RN-ERG-I2B333JR-1/Y	Metallic	33 K 5% 1/10W (C)	
R237,250,251	RN-ERG-I2B563JR-1/Y	Metallic	56 K 5% 1/10W (C)	
R238,261,264 272,329	RN-ERG-I2B104JR-1/Y	Metallic	100K 5% 1/10W (C)	
R256,257	RN-ERG-I2B124JR-1/Y	Metallic	120K 5% 1/10W (C)	
R258,259	RN-ERG-I2B272JR-1/Y	Metallic	2.7K 5% 1/10W (C)	
R268,269	RN-ERG-I2B562JR-1/Y	Metallic	5.6K 5% 1/10W (C)	
R278	RN-ERD-DF2R2J-3	Carbon	2.2 5% 1/2W	
R295,296	RN-ERG-I2B154JR-1/Y	Metallic	150K 5% 1/10W (C)	
R302,303,306 307	RN-ERG-I2B471JR-1/Y	Metallic	470 5% 1/10W (C)	
R304,305,308 309	RN-ERG-I2B181JR-1/Y	Metallic	180 5% 1/10W (C)	
R310~317 366~369	RN-ERG-I2B2R2JR-1/Y	Metallic	2.2 5% 1/10W (C)	
R320,321,349 350	RN-ERG-IC222J-1/TY	Metallic	2.2K 5% 1/8W (C)	
R324,325,370	RN-ERG-I2B470JR-1/Y	Metallic	47 5% 1/10W (C)	
R330,331 335~336,357	RN-ERG-I2B392JR-1/Y	Metallic	3.9K 5% 1/10W (C)	
R337~343,351 352,358	RN-ERG-I2B473JR-1/Y	Metallic	47 K 5% 1/10W (C)	
RV1(S215)	RN-ERV-1P4-1005	Variable	VOL,POWER	○
RV101,102	RN-ERV-1N2-1009	Variable	BASS	○
RV103,104,105	RN-ERV-1N3-1002	Variable	TRE	○
RV201,206	RN-ERV-ON1-240	Variable	2K	
RV202	RN-ERV-ON1-237	Variable	300	

Symbol. No.	Stock No.	Parts name	Description Chip:(C)	Remark
RV203	RN-ERV-ON1-246	Variable	50K	
RV204	RN-ERV-ON1-243	Variable	10K	
RV205	RN-ERV-ON1-242	Variable	5K	
RV207,208	RN-ERV-ON1-244	Variable	20K	
SEMICONDUCTORS				
D1	RN-EDS-1N5401U21B/FO	Silicon diode		○
D201,206,207 208,209,210 217,219,226	RN-EDS-MA151WK/TY	Silicon diode	Mark:MT (C)	○
D202,223,231	RN-EDS-MA153/TY	Silicon diode	Mark:MC (C)	○
D203	RN-EDS-MA151WA/TY	Silicon diode	Mark:MN (C)	○
D204,205 212~216,218 224,230,234 235	RN-EDS-MA151K/TY	Silicon diode	Mark:MH (C)	○
D211	RN-EDT-RD9R1MB3/TY	Zener diode	9.1V Mark:913 (C)	○
D225	RN-EDT-RD7R5MB3/TY	Zener diode	Mark:753 (C)	○
D227,228	RN-EDS-1A3	Silicon diode		○
D232,233	RN-EDT-RD180M/TY	Zener diode	Mark:181,182,183 (C)	○
IC101	RN-EIC-M5218L	Linear-monolithic IC		○
IC201	RN-EIC-BA401	Linear-monolithic IC		○
IC202	RN-EIC-LA1143	Linear-monolithic IC	FM IF AMP.&Q.DET	○
IC203	RN-EIC-AN7465S	Linear-monolithic IC		○
IC204	RN-EIC-LA3161	Linear-monolithic IC	EQ.AMP.	○
IC205	RN-EIC-LA2010	Linear-monolithic IC		○
IC206	RN-EIC-CXA1102P	Linear-monolithic IC		○
IC207,208	RN-EIC-AN7173K-LD	Linear-monolithic IC	POWER AMP.	○
IC209	RN-EIC-AN6540	Linear-monolithic IC	8.5V	○
IC210	RN-EIC-S81250HG	Linear-monolithic IC	5 V	○
IC211	RN-EIM-UPD1719G-555	Digital-monolithic IC		○
Q101,102,210 211	RN-EVS-DTC314TK/TY	Silicon transistor	Mark:H04 (C)	○
Q201~203,206 207,215,217 221,222,224 241,243,246 247,252,253	RN-EVS-DTC144EK/TY	Silicon transistor	Mark:26 (C)	○
Q204,205,208 209,230,231	RN-EVS-2SD601-QRS/TY	Silicon transistor	Mark:YQ,YR,YS (C)	○
Q212	RN-EVS-DTA114TK/TY	Silicon transistor	Mark:94 (C)	○
Q213,214,229 239,242	RN-EVS-DTA114EK/TY	Silicon transistor	Mark:14 (C)	○
Q216	RN-EVS-2SD1048-678/TY	Silicon transistor	Mark:X6,X7,X8 (C)	○
Q219,249	RN-EVS-DTC114EK/TY	Silicon transistor	Mark:24 (C)	○
Q220,223	RN-EVF-2SJ106-YGB/TY	FET	Mark:VY,VG,VB (C)	○
Q225	RN-EVS-2SD973-QRS	Silicon transistor		○
Q226,232,233 235,250	RN-EVS-2SB815-67/TY	Silicon transistor	Mark:B6,B7 (C)	○
Q227,236	RN-EVS-2SC2532/TY	Silicon transistor	Mark:AN (C)	○

Symbol. No.	Stock No.	Parts name	Description Chip:(C)	Remark
Q234	RN-EVS-DTC124EK/TY	Silicon transistor	Mark:25 (C)	○
Q251	RN-EVS-DTD123YK/TY	Silicon transistor	Mark:F62 (C)	○
MISCELLANEOUS ELECTRICAL				
CF201	RN-EFC-F2-114	Ceramic filter	10.7MHz	
J1	RN-EJA-1016	Antenna receptacle		
J210	RN-EWI-1282	Lead assembly	6P-5P	
J240	RN-EJU-9006-FAB15	Connector	15P	
J250	RN-EJU-9006-FAB14	Connector	14P	
J260-360	RN-EWI-1283A	Lead assembly	10P-9P	
J280	RN-EWI-1279	Lead assembly	4P-3P	
J290	RN-EWI-1274	Lead assembly		
J291	RN-EWI-1278	Lead assembly		
J292	RN-EWI-1277	Lead assembly		
J293	RN-EWI-1276	Lead assembly		
J294	RN-EWI-1275	Lead assembly		
J295	RN-EWI-1273	Lead assembly		
J300	RN-EJU-1407-FAB08	Connector	8P	
J301	RN-EWI-1281	Lead assembly		
J302	RN-EWI-1280	Lead assembly	6P-5P	
L1	RN-ELL-1063	Choke	0.4mH	
L2	RN-ELL-336	Choke	2.6mH	
L201,202,204	RN-ELH-C6R8-KAL/TP	Choke	6.8uH	
L203	RN-ELH-C102-6	Choke	1 mH	
P1	RN-EJU-S16V-1357	Connector	16P	
P8-J8	RN-EWJ-5243A	Lead assembly	DIN8P-8P	
P210	RN-EJU-4006-MAW05	Connector	5P	
P220	RN-EJU-4006-MAW04	Connector	4P	
P230	RN-EJU-4006-MAW07	Connector	7P	
P360	RN-EJU-4006-MAW09	Connector	9P	
PL201	RN-EPM-1401A	Lamp assembly	14V,50mA,80mA	○
PL202	RN-EPM-1400A	Lamp assembly		○
S201~211,213 214(P300)	RN-ESD-1042A	Push switch		○
S216	RN-ESS-12-1088	Slide switch		○
S217	RN-ESB-1N1-1019	Push switch		○
T201	RN-ETF-1023	FM IF transformer		
TV201	RN-ETV-1105	Front end		○
VE1	RN-EVE-1058	Liquid crystal element	LCD	○
VV201	RN-EVV-C10DK220	Varistor		○
X201	RN-EXC-1036	Crystal		

Illus. No.	Stock No.	Parts name	Description	Q'ty	Remark
MECHANICAL					
501	RN-MAD-1446B	Chassis	TOP	1	
502	RN-MAD-1447B	Chassis	BOTTOM	1	
503	RN-MDP-2159A	Escutcheon	Ass'y	1	○
504	RN-MRE-1238	Heat-sink	BACK	1	
505	RN-MLF-1336C	Filter	For 503	1	
506	RN-MHE-2087A	Holder	For 503	1	
507	RN-MLC-1270B	Douser	For LCD	1	
508	RN-MSB-1253	Shield plate	LCD	1	
509	RN-MYB-2668B	Button	FF	1	○
510	RN-MYB-2669B	Button	REW	1	○
512	RN-MYB-2667A	Button	EJE	1	○
513	RN-MYC-1104	Knob	ON,VOL,PULL,FAD	1	○
514	RN-MYC-1090A	Knob	BASS,TRE,BAL	2	○
515	RN-MCV-1849	Door	DOOR	1	
516	RN-MSC-237B	Spring	For 515	1	
517	RN-MSI-1100	Pin	For 515	1	
518	RN-MLC-1265D	Douser	For 503	1	
519	RN-MIP-1660	Insulater	VOL.	1	
520	RN-MHE-2089	Holder	DACK	1	
521	RN-MIP-1659B	Insulater	MAIN	1	
522	RN-MHE-2088	Holder	DACK	1	
525	RN-MHE-2090B	Holder	For IC	1	
526	RN-MHE-2091A	Holder	For VOL.	1	
527	RN-MHE-2092A	Holder	For LCD	1	
☆530	———	PC board and parts	VOL,MAIN	1	
531	RN-MPC-2329A	PC board	POWER	1	
532	RN-MPC-2352A	PC board	BASS/TRE	1	
533	RN-MLC-1272	Douser	For 512	1	
538	RN-MLC-1273C	Douser	POLYESTER	1	
541	RN-MCF-15	Clamp		1	
601	RN-MTJ-1N2.6X6	Screw		2	
602	F6-SBD-3X4S	Screw	ANT	1	
603	RN-MET-253	Special screw	3X8mm	2	
604	RN-MTJ-1N2.6X6	Screw	2.6X6mm	1	
605	RN-MET-147	Special screw	3X8mm	1	
607	RN-MEN-1059	Special nut		2	
608	RN-MSN-1	Nut		1	
609	F6-SBD-3X6S	Screw	3X6mm	11	
610	F6-SBD-3X12S	Screw	3X12mm	1	
611	F6-SSA-3X6S	Screw	3X6mm	5	
612	F6-SBD-2.6X3S	Screw	2.6X3mm	4	

NOTE : 1.Specifications subject to change without prior notice.
2.It takes long time to supply some parts marked ☆ since we do not always have them in store.
In the worst case, we can't supply them for you.

CASSETTE DECK (RN-MDK-72-04)

Illus.No. (Fig.10)	Stock No.	Description	Q'ty	Remark
MECHANICAL				
1	RN-MAS-1068	Chassis,main	1	
2	RN-MYT-1308	Sub-chassis	1	
3	RN-MUL-1388	Lever	1	
4	RN-MHE-1775	Holder	1	
5	RN-MUL-1389	Lever	1	
6	RN-MUL-1390	Lever	1	
7	RN-MUL-1391	Lever	1	
8	RN-MHE-1776	Holder	1	
9	RN-MUL-1392	Lever	1	
10	RN-MHE-1777	Holder	1	
11	RN-MUL-1393	Lever	1	
13	RN-MHE-1778	Holder	2	
14(A401)	RN-MHE-1779	Holder,(Includes P.B Head)	1	○
16	RN-MUF-1026	Flywheel	2	
17	RN-MKR-1217	Pinchroller assembly(F)	1	
18	RN-MKR-1218	Pinchroller assembly(R)	1	
19	RN-MKS-1027	Slip mechanism	2	○
20	RN-MKS-1028	Slip mechanism	1	○
25	RN-MKi-1027	Slide plate assembly	1	
26	RN-MHE-1780	Holder	1	
27	RN-MUL-1394	Lever	1	
28	RN-MUL-1395	Lever	1	
29	RN-MUL-1396	Lever	1	
30	RN-MUL-1453	Lever	1	
31	RN-MUL-1397	Lever	1	
32	RN-MUC-1036	Cum	1	
33	RN-MYT-1309	Sub-chassis	1	
34	RN-MUL-1398	Lever	1	
35	RN-MUL-1399	Lever	1	
36	RN-MYT-1310	Sub-chassis	1	
37	RN-MUL-1400	Lever	1	
38	RN-MYT-1311	Sub-chassis	1	
39	RN-MHE-1781	Holder	1	
40	RN-MUL-1401	Lever	1	
41	RN-MUL-1402	Lever	1	
42	RN-MHE-2132A	Holder	1	
43	RN-MUL-1450	Lever	1	
46	RN-MUG-1403	Gear	1	
47	RN-MUL-1195	Lever	1	
48	RN-MUG-1404	Gear	1	
49	RN-MUG-1196	Gear	1	
50	RN-MUG-1197	Gear	1	
51	RN-MUG-1198	Gear	1	
52	RN-MHE-1782	Holder	1	
53	RN-MHE-1783	Holder	1	

Illus.No. (Fig.10)	Stock No.	Description	Q'ty	Remark
54	RN-MHE-1784	Holder	1	
55	RN-MHE-1785	Holder	1	
56	RN-MUC-1037	Cum	1	
57	RN-MUL-1405	Lever	1	
58	RN-MHE-1786	Holder	1	
59	RN-MUC-1038	Cum	2	
60	RN-MRP-1132	Roller	1	
61	RN-MUG-1199	Gear	1	
62	RN-MUG-1200	Gear	1	
63	RN-MRP-1133	Roller	1	
64	RN-MUG-1201	Gear	2	
65	RN-MUG-1202	Gear	4	
69	RN-MSI-1109	Shaft	1	
70	RN-MST-1125	Spacer	1	
71	RN-MST-1126	Spacer	1	
74	RN-MST-1129	Spacer	1	
75	RN-MST-1130	Spacer	1	
76	RN-MST-1131	Spacer	1	
77	RN-MST-1162	Spacer	2	
81	RN-MSC-1439	Spring	1	
82	RN-MSC-1440	Spring	1	
83	RN-MSC-1441	Spring	1	
84	RN-MSC-1442	Spring	1	
85	RN-MSC-1443	Spring	2	
86	RN-MSC-1444	Spring	1	
87	RN-MSC-1445	Spring	1	
88	RN-MSC-1446	Spring	1	
89	RN-MSC-1447	Spring	1	
90	RN-MSC-1448	Spring	1	
91	RN-MSC-1449	Spring	1	
92	RN-MSC-1450	Spring	1	
93	RN-MSC-1451	Spring	1	
94	RN-MSC-1452	Spring	1	
95	RN-MSC-1453	Spring	1	
96	RN-MSC-1454	Spring	1	
97	RN-MSC-1455	Spring	2	
98	RN-MSC-1456	Spring	2	
99	RN-MSC-1457	Spring	1	
100	RN-MSC-1458	Spring	1	
101	RN-MSC-1459	Spring	1	
102	RN-MSC-1460	Spring	1	
103	RN-MSC-1461	Spring	1	
104	RN-MSE-1669	Spacer	1	
105	RN-MSC-1462	Spring	1	
106	RN-MSC-1507	Spring	1	
109	RN-MUB-1046	Belt	1	○
110	RN-MUB-1047	Belt	1	○
111	RN-MSW-1013	Spring	1	

Illus.No. (Fig.10)	Stock No.	Description	Q'ty	Remark
112	RN-MSW-1014	Spring	1	
113	RN-MSE-1670	Spacer	1	
114	RN-MST-1163	Spacer	1	
115	RN-MET-1472	Special screw	2	
116	RN-MWP-1127	Washer	1	
118(M401)	RN-EDM-1089	Motor	1	○
119(J230)	RN-EWj-5312	7P connector and lead assembly	1	
120(J220)	RN-EWj-5314	4P connector and lead assembly	1	
121	RN-MPM-2994	PC board	1	
122(S408)	RN-ESL-1047	Leaf switch,FF/REW	1	○
123(S409)	RN-ESS-1070	Slide switch	1	○
124(S401)	RN-ESM-1017	Micro switch,AR/CS	1	○
125(E401)	RN-EEM-1048	Solenoid	1	
129	RN-MET-1473	Special screw	2	
130	RN-MET-1356	Special screw	2	
132	RN-MET-1357	Special screw	1	
134	RN-MET-1358	Special screw	5	
136	RN-MET-1359	Special screw	1	
137	RN-MET-1360	Special screw	1	
138	F6-SBD-2.6×3S	Screw,2.6×3mm	1	
139	RN-MET-1361	Special screw	2	
140	RN-MET-1362	Special screw	1	
141	RN-MET-1363	Special screw	1	
142	RN-MET-1364	Special screw	3	
144	RN-MET-1365	Special screw	1	
146	RN-MET-1366	Special screw	2	
151	F6-ER-1.2	E-type ring,1.2mm	2	
152	F6-ER-1.5	E-type ring,1.5mm	4	
153	F6-ER-2	E-type ring,2mm	1	
154	F6-ER-2.5	E-type ring,2.5mm	1	
155	F6-ER-1.5	E-type ring,1.5mm	2	
159	RN-MWP-1114	Washer	4	
160	RN-MWP-1115	Washer	3	
161	RN-MWP-1116	Washer	5	
162	RN-MWP-1117	Washer	1	
163	RN-MWP-1128	Washer	1	
166	RN-MWP-1118	Washer	2	
167	RN-MWP-1119	Washer	1	
171	RN-MWS-1053	Washer	1	

NOTE : Specifications subject to change without prior notice.

8901DE1.15

SCHEMATIC

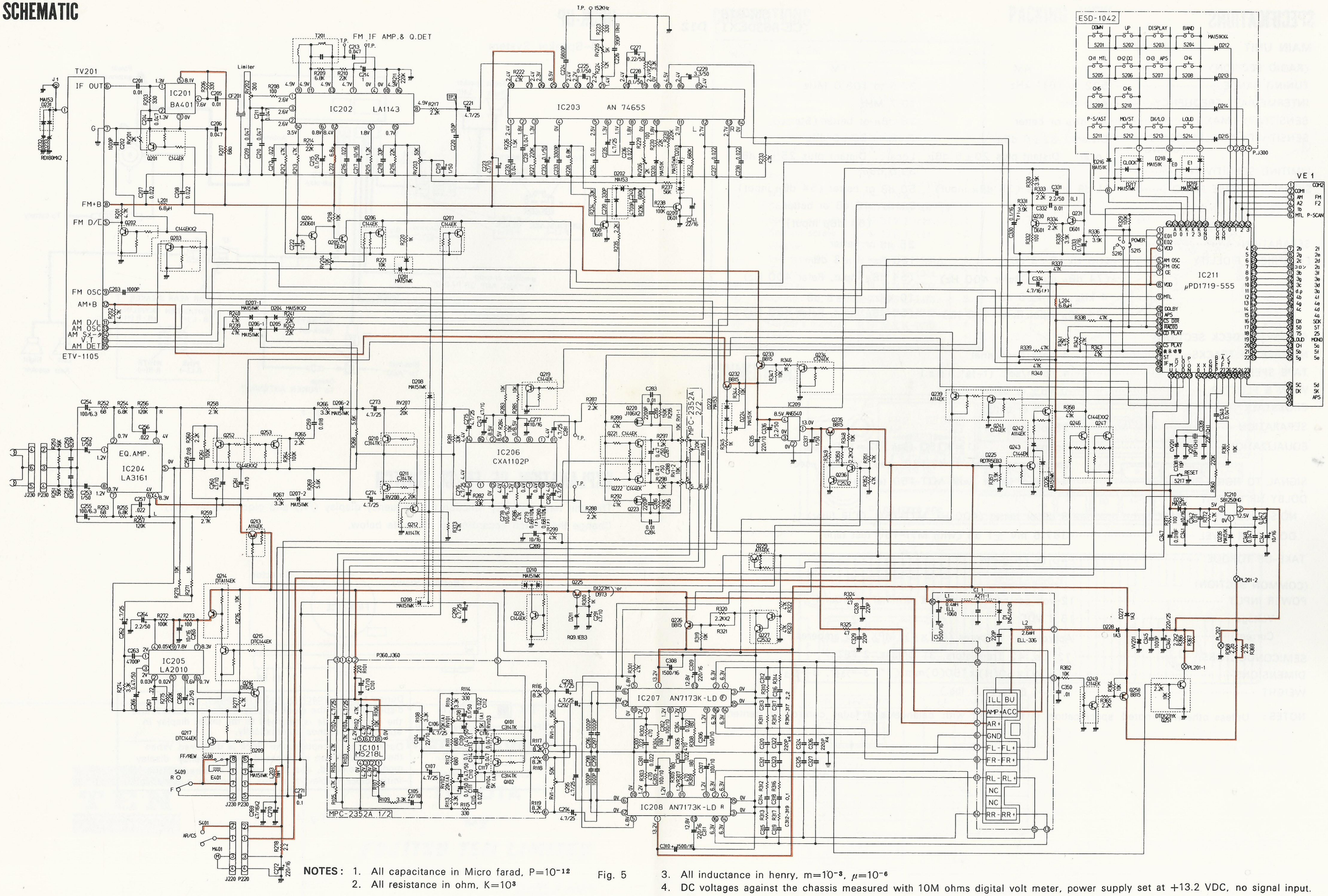

NOTES: 1. All capacitance in Micro farad, $P=10^{-12}$
2. All resistance in ohm, $K=10^{3}$

Fig. 5

3. All inductance in henry, $m=10^{-3}$, $\mu=10^{-6}$
4. DC voltages against the chassis measured with 10M ohms digital volt meter, power supply set at +13.2 VDC, no signal input.

WIRING ON PC BOARD

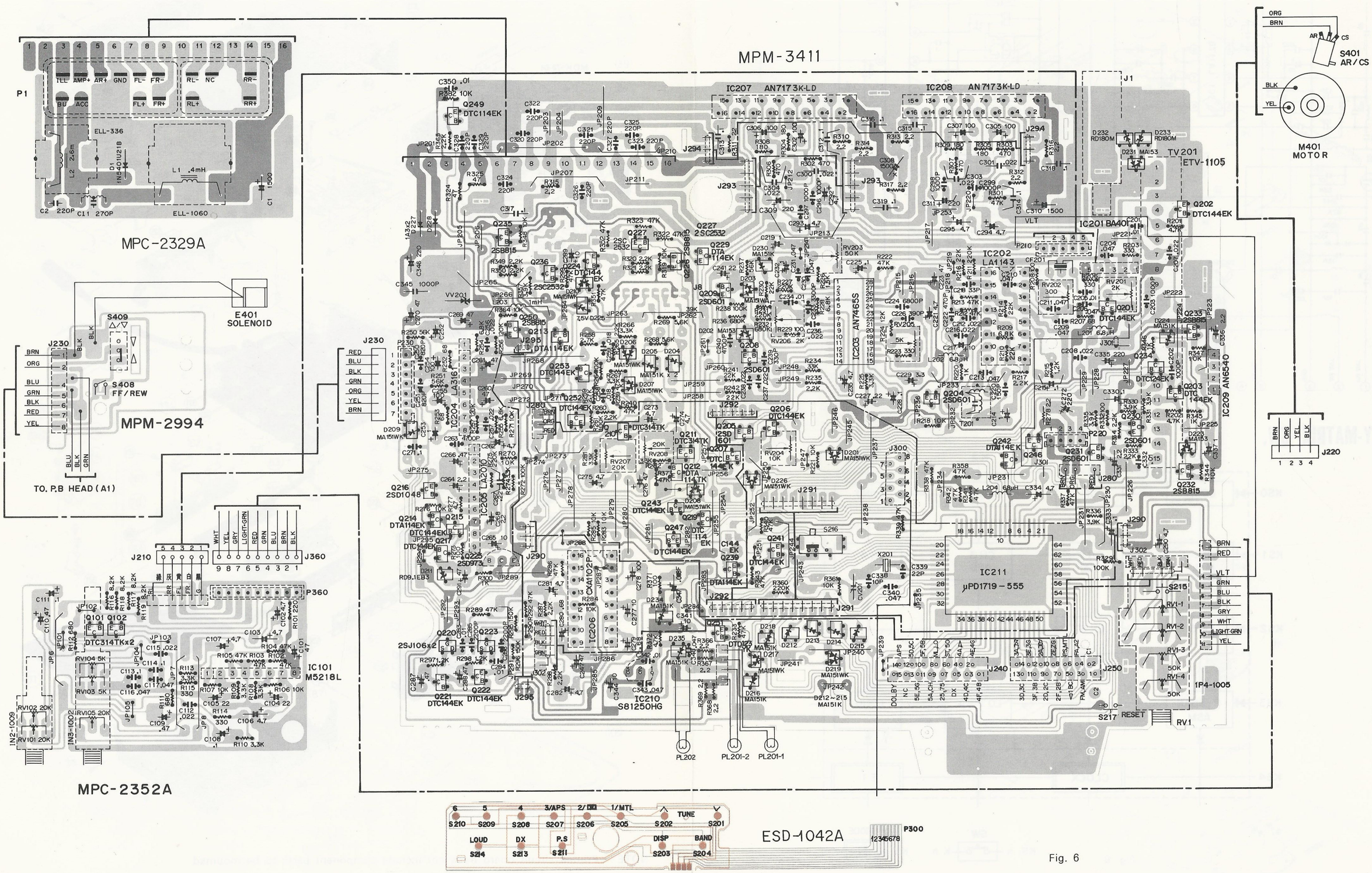

Fig. 6